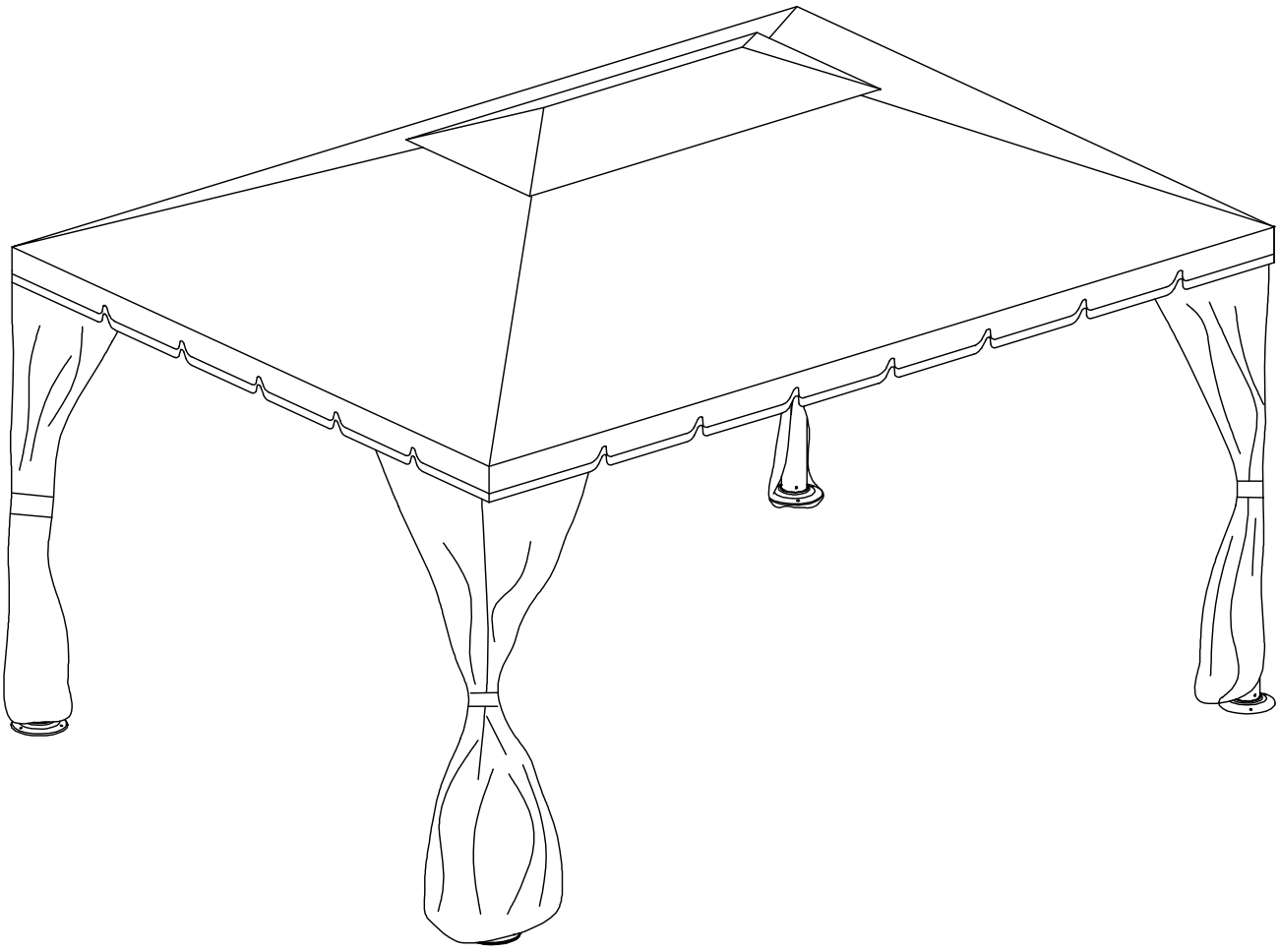
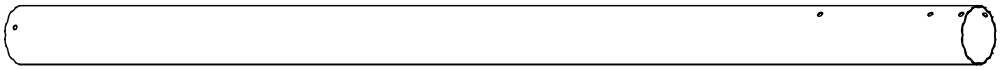
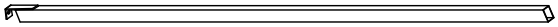
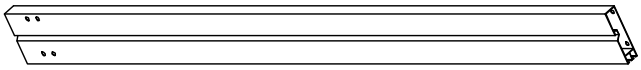
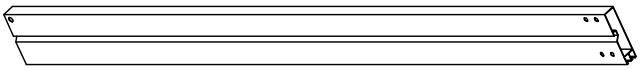
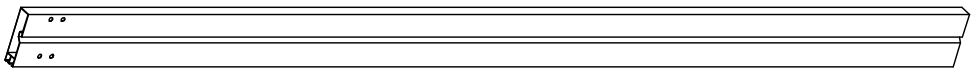
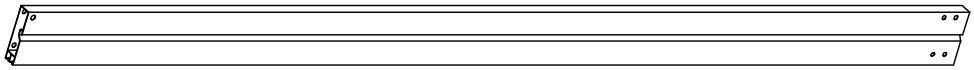
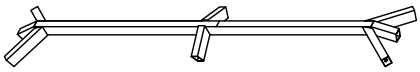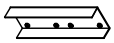
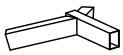
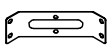
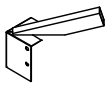
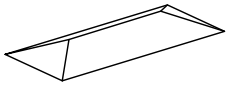
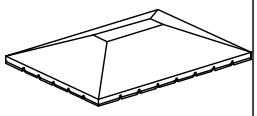
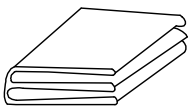
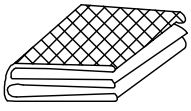
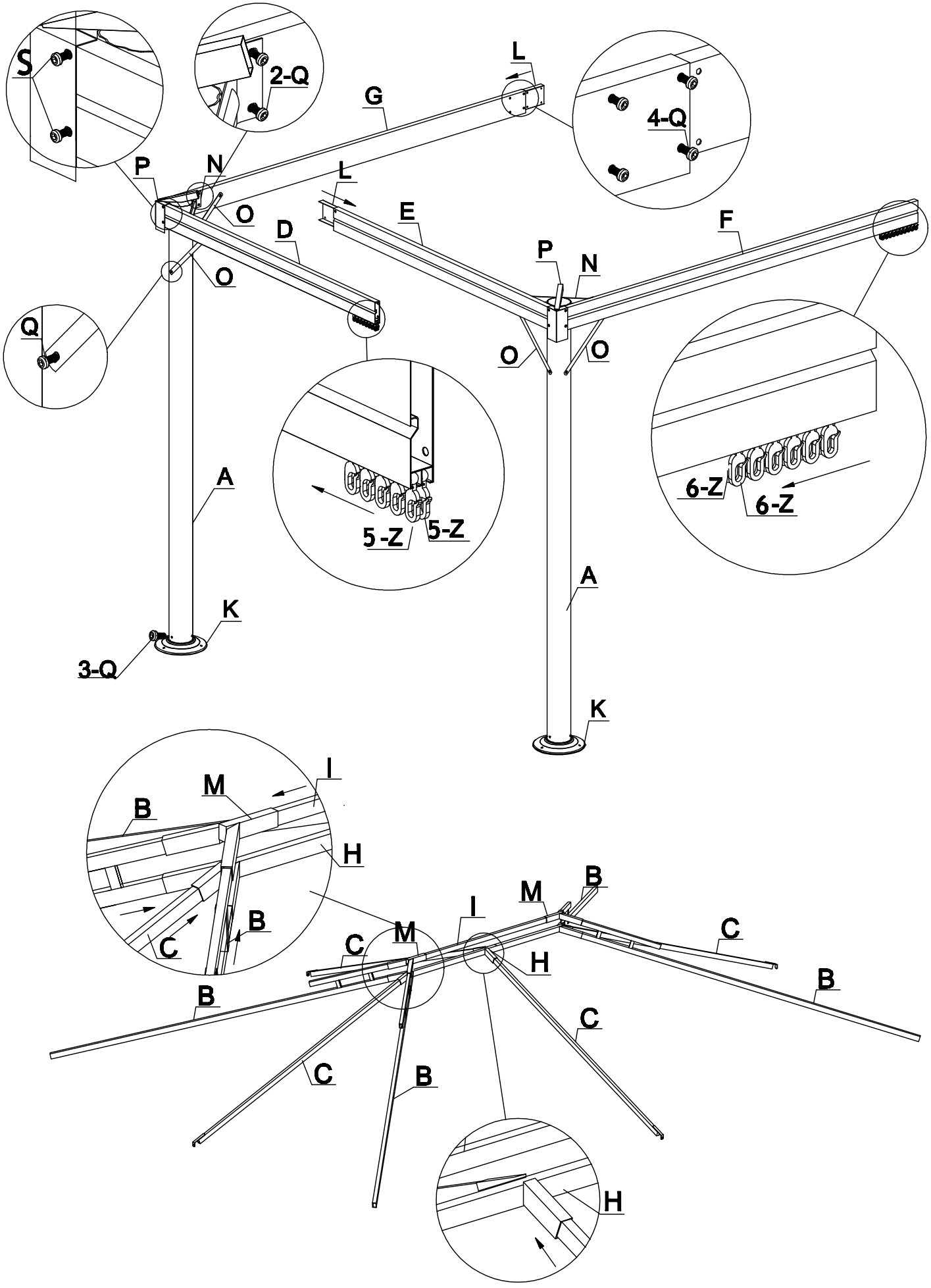
GA802021

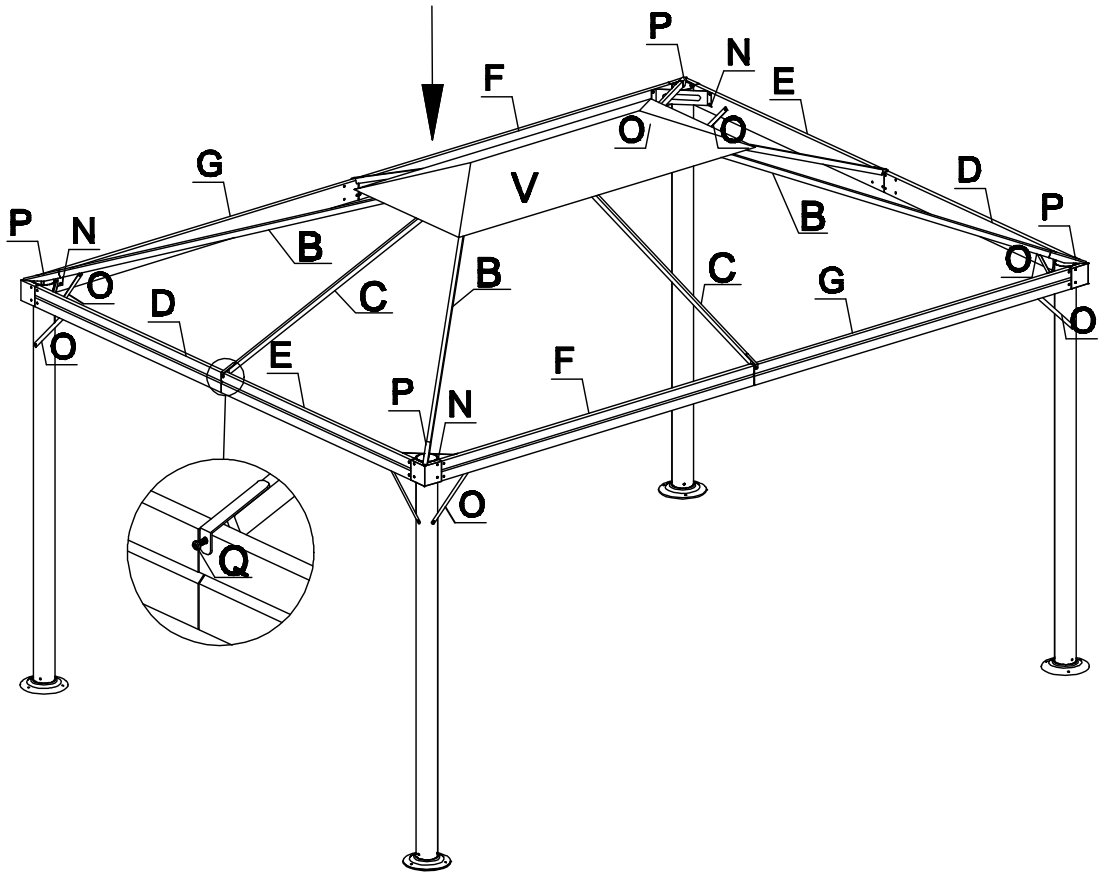
3x4 Roma Gazebo

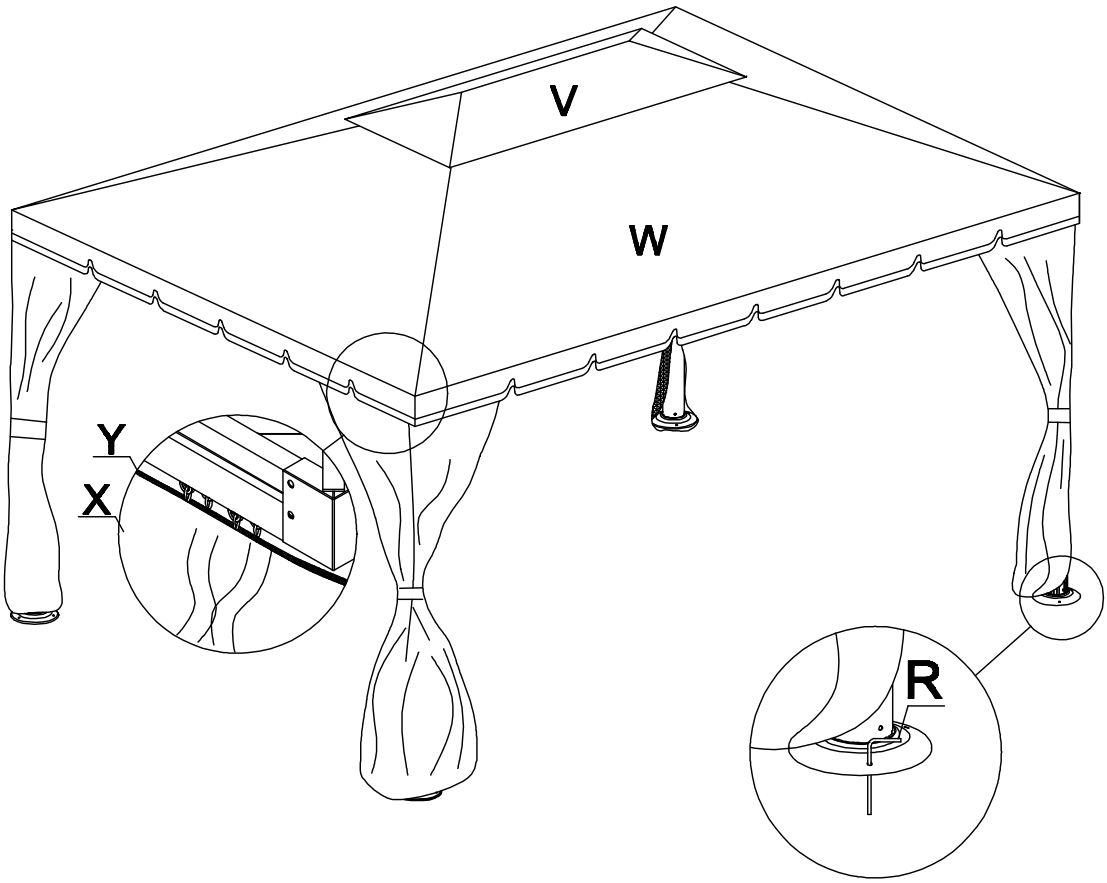


A		4
B		4
C		4
D		2
E		2
F		2
G		2
H		1
I		1
		2

K		4	L		4	M		2
N		4	O		8	P		4
Q	 M6*15	80	S	 M6* 40	16	R		12
T		1	Z		88	V		1
W		1	X		4			
			Y		4			


S
2-Q
G
L
4-Q
P
N
L
O
D
E
F
P
N
O
Q
O
O
A
5-Z
5-Z
6-Z
6-Z
K
A
3-Q
K
I
M
B
H
B
M
I
B
C
C
M
C
H
B
B
C
C
B
C
B
H


P
N
E
F
O
O
G
V
D
P
B
P
N
B
O
C
B
C
G
O
D
O
E
F
P
N
O
Q


V
W
Y
X
R